Lecture 5: Primal-dual optimality conditions

Overview

- Want to establish that $\boldsymbol{x}^*$ local minimum of f over S implies that a well-defined condition holds that we can easily check
- This is possible when constraints are linear, since the set of feasible directions then can be stated simply
- With non-linear constraints things become more complicated
- *Constraint qualifications* CQ are needed to make sure that the *well-defined* condition is a necessary condition for local optimality (rule out strange cases)
- Under convexity, the condition turns out to also always (under no CQ) be sufficient for global optimality
- Called the *Karush–Kuhn–Tucker* conditions
- Karush: master's student at Univ. of Chicago, 1939
  Tucker/Kuhn: prof./Ph.D. student at Princeton Univ., 1951

- Of course, a globally optimal solution must then satisfy the KKT conditions. But it is *not* practical to search for all KKT points and pick the best. Its use is for checking that an algorithm has found the right solution
- Compare checking for every x with $f'(x) = 0$ in $\mathbb{R}$!
- The user has all the responsibility!

Cautions needed!

- Costly errors can be made if one ignores that KKT conditions are *necessary*, but not always *sufficient*
- US Air Force's B-2 Stealth bomber program: Reaganism, 1980s
- Design variables: various dimensions, distribution of volume between wing and fuselage, flying speed, thrust, fuel consumption, drag, lift, air density, etc
- Objective: maximum range on full tank
- Model from the 1940s which had produced B-29, B-52, etc
- Solution to the KKT conditions found; specified design variable values that put almost all of the total volume in the wing, leading to the *flying wing design* for the B-2 bomber
- Billions of dollars later, found the design solution works, but its range too low in comparison with other bomber designs

- Review carried out. The model is correct!
- But ... The model was a nonconvex NLP; the review revealed a second solution to the KKT system
- Much less wing volume! Looks like an airplane! Maximizes range!
- In other words, the design implemented was the aerodynamically *worst* possible choice of configuration, leading to a very costly error
- Still flies. Why? Happens that it has good properties wrt. radar protection (stealth) ...

Nice photos, I

Nice photos, II

Overview, cont'd

- The condition must not only be easy to check, it should also state something useful
- It is easy to state some condition: *If $\boldsymbol{x}^*$ is a local minimum of f over S then it is also feasible*
- Completely useless, since it is satisfied for every feasible point
- That is what we end up with if we want something that is applicable to every problem. We need to get rid of some weird problems, and that is a main reason for introducing the CQs
- We begin by studying an abstract problem and provide a *geometric optimality condition*
- Next, we state the corresponding result for an explicit representation of S in terms of constraints. This is the *Fritz John* condition

- Introducing a CQ we then obtain the *Karush–Kuhn–Tucker* conditions
- There is more than one CQ, some more useful than others in particular cases
- *Linear independence of the equality constraints* is the classic one from the Lagrange multiplier rule. We extend it and show others

Geometric optimality conditions

Problem:

$$\begin{aligned} &\text{minimize } f(\boldsymbol{x}), \\ &\text{subject to } \boldsymbol{x} \in S, \end{aligned} \tag{1}$$

$S \subset \mathbb{R}^n$ nonempty, closed; $f : \mathbb{R}^n \to \mathbb{R}$ in C^1

- Idea: at a local minimum $\boldsymbol{x}^*$ of f over S it is impossible to draw a curve from $\boldsymbol{x}^*$ such that it is feasible and f decreases along it
- Cannot work with f itself; descent is measured in terms of directional derivatives. Linearize f
- We must also "linearize" S. Reason: the cone of feasible directions may be too small to be useful; also, it is difficult to state it explicitly. We replace the cone of feasible directions with the *tangent cone* to S at $\boldsymbol{x}^*$

- The *cone of feasible directions* for S at $\boldsymbol{x} \in \mathbb{R}^n$ is

$$R_S(\boldsymbol{x}) := \{\, \boldsymbol{p} \in \mathbb{R}^n \mid \exists\, \widetilde{\delta} > 0 \text{ such that } \boldsymbol{x} + \delta \boldsymbol{p} \in S, 0 \le \delta \le \widetilde{\delta} \,\}$$

- The *tangent cone* for S at $\boldsymbol{x} \in \mathbb{R}^n$ is

$$T_S(\boldsymbol{x}) := \{\, \boldsymbol{p} \in \mathbb{R}^n \mid \exists\, \{\boldsymbol{x}_k\} \subset S, \{\lambda_k\} \subset (0, \infty) : \lim_{k \to \infty} \boldsymbol{x}_k = \boldsymbol{x}, \lim_{k \to \infty} \lambda_k (\boldsymbol{x}_k - \boldsymbol{x}) = \boldsymbol{p} \,\}$$

- $T_S(\boldsymbol{x})$ is closed; the set of tangents to sequences $\{\boldsymbol{x}_k\} \subset S$
- *It holds that* $\operatorname{cl} R_S(\boldsymbol{x}) \subset T_S(\boldsymbol{x})$ *for every* $\boldsymbol{x} \in \mathbb{R}^n$
- Suppose that for functions $g_i \in C^1$, $i = 1, \ldots, m$:

$$S := \{\, \boldsymbol{x} \in \mathbb{R}^n \mid g_i(\boldsymbol{x}) \le 0, \quad i = 1, \ldots, m \,\}$$

- Two further cones:

$$\overset{\circ}{G}(\boldsymbol{x}) := \{\, \boldsymbol{p} \in \mathbb{R}^n \mid \nabla g_i(\boldsymbol{x})^{\mathrm{T}} \boldsymbol{p} < 0, i \in \mathcal{I}(\boldsymbol{x}) \,\},$$

and

$$G(\boldsymbol{x}) := \{\, \boldsymbol{p} \in \mathbb{R}^n \mid \nabla g_i(\boldsymbol{x})^{\mathrm{T}} \boldsymbol{p} \le 0, i \in \mathcal{I}(\boldsymbol{x}) \,\}$$

- *For every* $\boldsymbol{x} \in \mathbb{R}^n$ *it holds that* $\overset{\circ}{G}(\boldsymbol{x}) \subset R_S(\boldsymbol{x})$, *and* $T_S(\boldsymbol{x}) \subset G(\boldsymbol{x})$
- So, for every $\boldsymbol{x} \in \mathbb{R}^n$,

$$\overset{\circ}{G}(\boldsymbol{x}) \subset R_S(\boldsymbol{x}) \subset \operatorname{cl} R_S(\boldsymbol{x}) \subset T_S(\boldsymbol{x}) \subset G(\boldsymbol{x})$$

Four examples, I

- $S = \{\, \boldsymbol{x} \in \mathbb{R}^2 \mid -x_1 \leq 0, (x_1 - 1)^2 + x_2^2 \leq 1 \,\}$
- $R_S(\mathbf{0}^2) = \{\, \boldsymbol{p} \in \mathbb{R}^2 \mid p_1 > 0 \,\}$
- $T_S(\mathbf{0}^2) = \{\, \boldsymbol{p} \in \mathbb{R}^2 \mid p_1 \geq 0 \,\}$
- $T_S(\mathbf{0}^2) = \operatorname{cl} R_S(\mathbf{0}^2)$

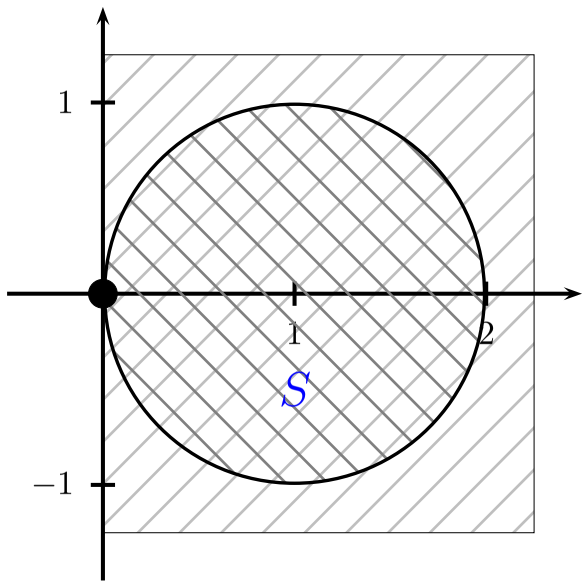

S

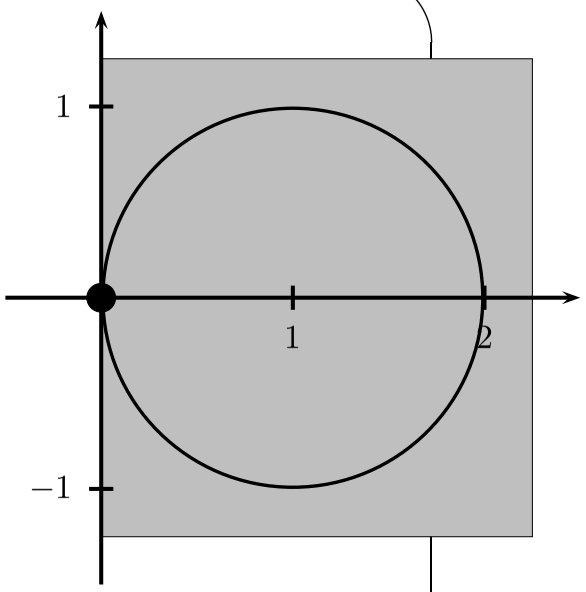

$T_S(\mathbf{0}^2)$

Four examples, II

- $S = \{\, \boldsymbol{x} \in \mathbb{R}^2 \mid -x_1 \le 0, -x_2 \le 0, x_1 x_2 \le 0 \,\}$
- $R_S(\mathbf{0}^2) = T_S(\mathbf{0}^2) = S$

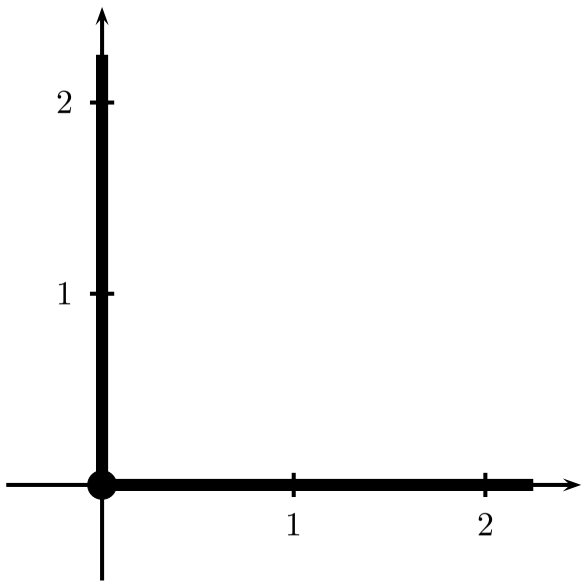

$S = T_S(\mathbf{0}^2)$

Four examples, III

- $S = \{\, \boldsymbol{x} \in \mathbb{R}^2 \mid -x_1^3 + x_2 \leq 0, x_1^5 - x_2 \leq 0, -x_2 \leq 0 \,\}$
- $R_S(\mathbf{0}^2) = \emptyset$
- $T_S(\mathbf{0}^2) = \{\, \boldsymbol{p} \in \mathbb{R}^2 \mid p_1 \geq 0, p_2 = 0 \,\}$

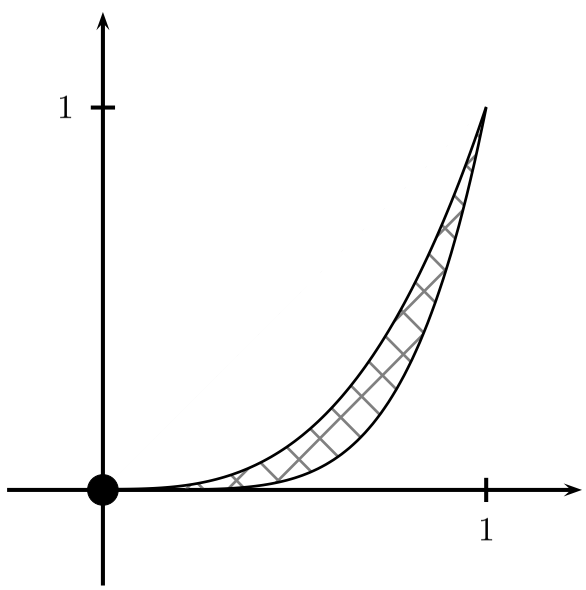

S

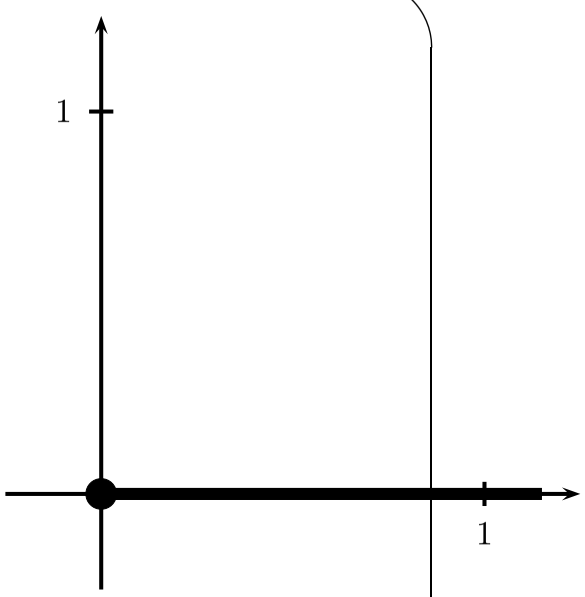

$T_S(\mathbf{0}^2)$

Four examples, IV

- $S = \{\, \boldsymbol{x} \in \mathbb{R}^2 \mid -x_2 \leq 0, (x_1 - 1)^2 + x_2^2 = 1 \,\}$
- $R_S(\mathbf{0}^2) = \emptyset$
- $T_S(\mathbf{0}^2) = \{\, \boldsymbol{p} \in \mathbb{R}^2 \mid p_1 = 0, p_2 \geq 0 \,\}$

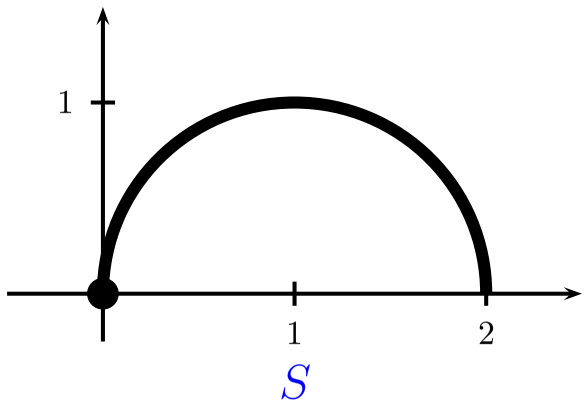

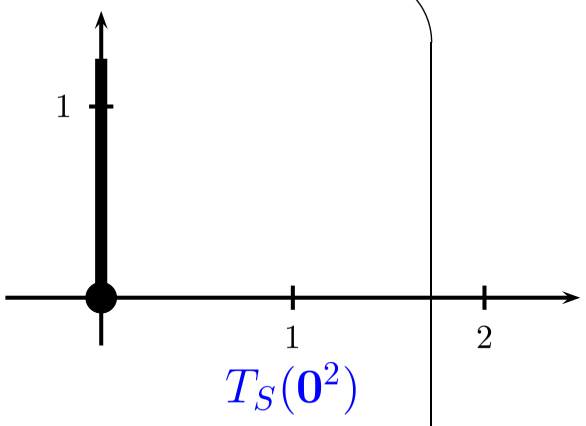

A geometric necessary optimality condition

- $\overset{\circ}{F}(\boldsymbol{x}^*) := \{\, \boldsymbol{p} \in \mathbb{R}^n \mid \nabla f(\boldsymbol{x}^*)^{\mathrm{T}} \boldsymbol{p} < 0 \,\}$
- *Consider the problem* (1). *If* $\boldsymbol{x}^* \in S$ *is a local minimum of* f *over* S *then* $\overset{\circ}{F}(\boldsymbol{x}^*) \cap T_S(\boldsymbol{x}^*) = \emptyset$
- This is an elegant criterion for checking whether a given point is a candidate for a local minimum. There is a catch though:
- The set $T_S(\boldsymbol{x}^*)$ is nearly impossible to compute in general!
- We will compute other cones that we hope will approximate $T_S(\boldsymbol{x}^*)$ well enough
- Specifically, we will use the cone $\overset{\circ}{G}(\boldsymbol{x})$

Example problem

- Consider the differentiable (linear) function $f : \mathbb{R}^2 \to \mathbb{R}$ defined by $f(\boldsymbol{x}) = x_1$
- Then, $\nabla f = (1, 0)^{\mathrm{T}}$, and $\overset{\circ}{F}(\mathbf{0}^2) = \{\, \boldsymbol{p} \in \mathbb{R}^2 \mid p_1 < 0 \,\}$
- $\boldsymbol{x}^* = \mathbf{0}^2$ is a local (in fact, even global) minimum in problem (1) with S given by either one of Examples I–IV
- Easy to check that the geometric necessary optimality condition $\overset{\circ}{F}(\mathbf{0}^2) \cap T_S(\mathbf{0}^2) = \emptyset$ is satisfied in all four examples (no surprise, in view of the above geometric theorem)

The Fritz John conditions

- *If $\boldsymbol{x}^* \in S$ is a local minimum of f over S then there exist multipliers $\mu_0 \in \mathbb{R}$, $\boldsymbol{\mu} \in \mathbb{R}^m$ such that*

$$\mu_0 \nabla f(\boldsymbol{x}^*) + \sum_{i=1}^{m} \mu_i \nabla g_i(\boldsymbol{x}^*) = \mathbf{0}^n, \tag{2a}$$

$$\mu_i g_i(\boldsymbol{x}^*) = 0, \quad i = 1, \ldots, m, \tag{2b}$$

$$\mu_0, \mu_i \geq 0, \quad i = 1, \ldots, m, \tag{2c}$$

$$(\mu_0, \boldsymbol{\mu}^{\mathrm{T}})^{\mathrm{T}} \neq \mathbf{0}^{m+1} \tag{2d}$$

- Proof via the geometric necessary conditions and Farkas' Lemma
- What's bad about the Fritz John conditions? It may be possible to fulfill (2) at every feasible point by setting $\mu_0 = 0$! Then, f plays no role, which is bad. We will develop conditions (constraint qualifications) which ensure that $\mu_0 > 0$

Comments

- The vector $\boldsymbol{\mu}$ is a vector of *Lagrange multipliers*. Each of them is associated with a constraint, and will be shown to be a measure of the sensitivity of the solution to changes in the constraints
- Conditions (2a), (2c) are known as the *dual feasibility* conditions
- Condition (2b) is the *complementarity condition*. States that for inactive constraints $i \notin \mathcal{I}(\boldsymbol{x}^*)$, $\mu_i = 0$ must hold
- Will take a closer look at the Examples I–IV, but wait until the KKT conditions have been developed
- We do this by introducing conditions that bring either $\overset{\circ}{G}(\boldsymbol{x})$ or $G(\boldsymbol{x})$ to be tight enough approximations of $T_S(\boldsymbol{x})$

The Karush–Kuhn–Tucker conditions

- *Abadie's CQ:* At $\boldsymbol{x} \in S$ Abadie's constraint qualification holds if $G(\boldsymbol{x}) = T_S(\boldsymbol{x})$
- Satisfied by Example I and IV
- *Assume that at $\boldsymbol{x}^* \in S$ Abadie's CQ holds. If $\boldsymbol{x}^* \in S$ is a local minimum of f over S then there exists $\boldsymbol{\mu} \in \mathbb{R}^m$ such that*

$$\nabla f(\boldsymbol{x}^*) + \sum_{i=1}^{m} \mu_i \nabla g_i(\boldsymbol{x}^*) = \mathbf{0}^n, \tag{3a}$$

$$\mu_i g_i(\boldsymbol{x}^*) = 0, \quad i = 1, \ldots, m, \tag{3b}$$

$$\boldsymbol{\mu} \geq \mathbf{0}^m \tag{3c}$$

- Proof by first noting that $\overset{\circ}{F}(\boldsymbol{x}^*) \cap T_S(\boldsymbol{x}^*) = \emptyset$, which due to our CQ implies that $\overset{\circ}{F}(\boldsymbol{x}^*) \cap G(\boldsymbol{x}^*) = \emptyset$. Rest of the proof by Farkas' Lemma. [*Note:* case of $m = 0$!]

Comments

- The statement in (3a) is that $\boldsymbol{x}^*$ is a stationary point to the Lagrangian function $\boldsymbol{x} \mapsto f(\boldsymbol{x}) + \boldsymbol{\mu}^{\mathrm{T}} \boldsymbol{g}(\boldsymbol{x}) = f(\boldsymbol{x}) + \sum_{i=1}^{m} \mu_i g_i(\boldsymbol{x})$
- The condition (3) is that $-\nabla f(\boldsymbol{x}^*) \in N_S(\boldsymbol{x}^*)$ holds. The normal cone $N_S(\boldsymbol{x}^*)$ is spanned by the normals of the active constraints

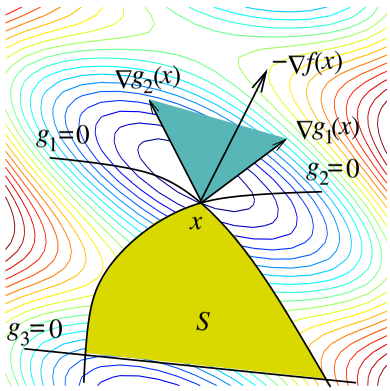

Example I

- Abadie's CQ is fulfilled, therefore the KKT-system is solvable Indeed, the system

$$\begin{cases} \begin{pmatrix} 1 \\ 0 \end{pmatrix} + \begin{pmatrix} -1 & -2 \\ 0 & 0 \end{pmatrix} \boldsymbol{\mu} = \mathbf{0}^2, \\ \boldsymbol{\mu} \geq \mathbf{0}^2, \end{cases}$$

  possesses solutions $\boldsymbol{\mu} = (\mu_1, 2^{-1}(1-\mu_1))^{\mathrm{T}}$ for every $0 \leq \mu_1 \leq 1$. Therefore, there are infinitely many multipliers, that all belong to a bounded set
- Case of a non-unique *dual* solution $\boldsymbol{\mu}$

Equality constraints

Additional constraints $h_j(\boldsymbol{x}) = 0$, $j = 1, \ldots, \ell$

- KKT system:

$$\nabla f(\boldsymbol{x}^*) + \sum_{i=1}^{m} \mu_i \nabla g_i(\boldsymbol{x}^*) + \sum_{j=1}^{\ell} \lambda_j \nabla h_j(\boldsymbol{x}^*) = \mathbf{0}^n, \tag{4a}$$

$$\mu_i g_i(\boldsymbol{x}^*) = 0, \quad i = 1, \ldots, m, \tag{4b}$$

$$\boldsymbol{\mu} \geq \mathbf{0}^m \tag{4c}$$

- $\mu_i \geq 0$ for the $\leq$-constraints; λ_j is sign free for $=$-constraints
- Interpretation: The condition (4) is a force equilibrium condition
- $-\nabla f(\boldsymbol{x}^*)$ is a force to violate the active constraints
- The remaining terms equal this force. $\mu_i \geq 0$ must hold (force towards feasibility). λ_j? Cannot determine before-hand in which direction the surface must move

Other constraint qualifications

- *Slater CQ—convex sets with interior points*: The feasible set is convex, and there exists a feasible point such that every inequality constraint is satisfied strictly
- *Linear independence CQ*: The gradients of all the active constraints are linearly independent
- *Linear constraints CQ*: All the constraints are affine/linear
- *Mangasarian–Fromowitz CQ*: The gradients of all the functions h_j are linearly independent, and the set $\overset{\circ}{G}(\boldsymbol{x}) \cap H(\boldsymbol{x})$ is nonempty, where

$$H(\boldsymbol{x}) := \{\, \boldsymbol{p} \in \mathbb{R}^n \mid \nabla h_i(\boldsymbol{x})^{\mathrm{T}} \boldsymbol{p} = 0, \quad i = 1, \ldots, \ell \,\}$$

- Some CQs are stronger than others: LICQ $\Longrightarrow$ MFCQ $\Longrightarrow$ Abadie; Slater $\Longrightarrow$ MFCQ; linear constraints $\Longrightarrow$ Abadie

Convexity implies sufficiency

- *Assume the problem* (1) *is convex, that is,* f *as well as* g_i, $i = 1, \ldots, m$, *are convex, and* h_j, $j = 1, \ldots, \ell$, *are affine; also, all functions are in* C^1. *Assume further that for* $\boldsymbol{x}^* \in S$ *the KKT conditions* (4) *are satisfied. Then,* $\boldsymbol{x}^*$ *is a* globally *optimal solution to the problem* (1).
- *Proof.*
- Check interesting applications in the book on the characterization of eigenvalues and eigenvectors!